TECO TBE SERIES BOILER TUBE EXPANDERS

Selection Guide:

Model : TBE

Tube Size I.D. 0.75″ - 3.78″
(19 - 96 mm)

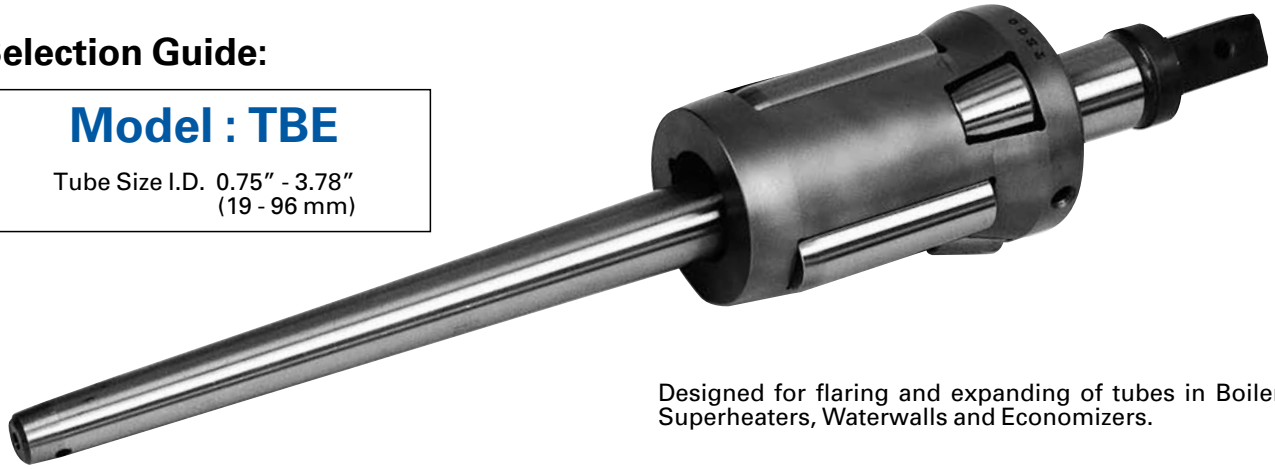

Designed for flaring and expanding of tubes in Boilers, Superheaters, Waterwalls and Economizers.

TOOL NO.	MIN. I.D. TUBE TOOL		MAX. TOOL EXPANSION		STD. ROLL LENGHT O.A.L.		ROLL EXPANSION & FLARE	MANDREL NO.	MANDREL O.A.L.		SHORT MANDREL SET (3 PCS)	SMS O.A.L		SIZE SQUARE ON MANDREL
	mm	Inch	mm	Inch	mm	Inch			mm	Inch		mm	Inch	
TBE-19	19	0.75	22	0.87	42	1.65	TBR-12	TBM-19	195	7.68				1/2″
TBE-20	20	0.79	23	0.91	42	1.65	TBR-12	TBM-20	195	7.68				1/2″
TBE-22	22	0.87	25	0.98	42	1.65	TBR-12	TBM-22	195	7.68				1/2″
TBE-23	23	0.91	26	1.02	42	1.65	TBR-13	TBM-23	195	7.68				1/2″
TBE-24	24	0.94	27	1.06	42	1.65	TBR-13	TBM-24	195	7.68				1/2″
TBE-25	25	0.98	28	1.10	42	1.65	TBR-13	TBM-25	195	7.68				1/2″
TBE-27	27	1.06	30	1.18	42	1.65	TBR-15	TBM-27	200	7.87				1/2″
TBE-28	28	1.10	32	1.26	42	1.65	TBR-16	TBM-28	260	10.24	TBMS-28	175	6.89	3/4″
TBE-29	29	1.14	33	1.30	42	1.65	TBR-16	TBM-29	260	10.24	TBMS-29	175	6.89	3/4″
TBE-30	30	1.18	34	1.34	42	1.65	TBR-16	TBM-30	260	10.24	TBMS-30	175	6.89	3/4″
TBE-32	32	1.26	36	1.42	42	1.65	TBR-17	TBM-32	260	10.24	TBMS-32	175	6.89	3/4″
TBE-35	35	1.38	41	1.61	42	1.65	TBR-21	TBM-37	310	12.20	TBMS-37	188	7.40	3/4″
TBE-37	37	1.46	43	1.69	42	1.65	TBR-22	TBM-37	310	12.20	TBMS-37	188	7.40	3/4″
TBE-40	40	1.57	46	1.81	50	1.97	TBR-40	TBM-42	310	12.20	TBMS-42	205	8.07	3/4″
TBE-42	42	1.65	48	1.89	50	1.97	TBR-23	TBM-42	310	12.20	TBMS-42	205	8.07	3/4″
TBE-44	44	1.73	50	1.97	50	1.97	TBR-23	TBM-44	310	12.20	TBMS-44	205	8.07	3/4″
TBE-47	47	1.85	54	2.13	50	1.97	TBR-24	TBM-47	338	13.31	TBMS-47	218	8.58	3/4″
TBE-49	49	1.93	56	2.20	50	1.97	TBR-24	TBM-49	338	13.31	TBMS-49	218	8.58	3/4″
TBE-52	52	2.05	59	2.32	50	1.97	TBR-25	TBM-49	338	13.31	TBMS-49	218	8.58	3/4″
TBE-54	54	2.13	62	2.44	50	1.97	TBR-26	TBM-54	375	14.76	TBMS-54	230	9.06	3/4″
TBE-57	57	2.24	66	2.60	50	1.97	TBR-27	TBM-57	395	15.55	TBMS-57	235	9.25	3/4″
TBE-60	60	2.36	69	2.72	50	1.97	TBR-28	TBM-57	395	15.55	TBMS-57	235	9.25	3/4″
TBE-65	65	2.56	74	2.91	50	1.97	TBR-29	TBM-65	395	15.55	TBMS-65	235	9.25	3/4″
TBE-68	68	2.68	78	3.07	50	1.97	TBR-30	TBM-72	425	16.73	TBMS-72	255	10.04	1″
TBE-72	72	2.83	82	3.23	50	1.97	TBR-31	TBM-72	425	16.73	TBMS-72	255	10.04	1″
TBE-77	77	3.03	87	3.43	50	1.97	TBR-32	TBM-77	425	16.73	TBMS-77	255	10.04	1″
TBE-82	82	3.23	92	3.62	50	1.97	TBR-33	TBM-82	425	16.73	TBMS-82	255	10.04	1″
TBE-86	86	3.39	96	3.78	50	1.97	TBR-34	TBM-86	425	16.73	TBMS-86	255	10.04	1″
TBE-90	90	3.54	102	4.02	50	1.97	TBR-34	TBM-90	485	19.09	TBMS-90	275	10.83	1″
TBE-96	96	3.78	108	4.25	50	1.97	TBR-35	TBM-96	485	19.09	TBMS-96	275	10.83	1″

Extra roll length:

TBE-19 up to TBE-27, 30 mm (1.18″) OR 50 mm (1.97″).
TBE-28 up to TBE-37, 30 mm (1.18″) OR 50 mm (1.97″) OR 60 mm (2.36″) OR 70 mm (2.76″).
TBE-40 up to TBE-96, 40 mm (1.57″) OR 60 mm (2.36″) OR 70 mm (2.76″) OR 80 mm (3.15″) OR 90 mm (3.54″) OR 100 mm (3.94″).

Expanders from TBE-35 to TBE-96 have metal roll retainer.
Expanders from TBE-19 to TBE-32 have pin hole rather than metal roll retainer.
If you order expander TBE-54 with rolls of 50 mm you should specify TBE-5450, with 60 mm TBE-5460.

Short mandrel set with shorter length on request.